# MECHANICAL PULPING – REFINER MECHANICAL PULPS

## 1 History of refiner mechanical pulping

For many years all mechanical pulp was made from stone groundwood (SGW). This required whole logs. Starting in the 1950s, but really growing in the 1970s, wood chips rather than logs became the principal source of mechanical pulp through the introduction of chip refiners. At first these were unpressurized disc refiners (RMP), then later high temperature, pressurized refiners (TMP), followed later by refiners with various chemical pre-treatments and post treatments, sometimes with pulp brightening (BCTMP). The combinations of refiner type, temperature, and chemical treatment are now so numerous that their acronyms are called “alphabet pulps”.

Some of the significant dates of this development are:

- 1957 Stora (Sweden) installed a Defibrator “raffinator”. Bauer soon after installed one in the U.S.
- 1963 Both companies modified to operate under pressure to make Thermo-mechanical pulp
- 1970’s First 100% TMP newsprint
- 1980’s 2-stage refining and heat recovery
- 1985 Large refiners 15MW.
- Chemicals added to further soften lignin (CTMP). Mechanical pulps are replacing chemical pulps
- Today: Two companies left: Metso and Andritz. Mechanical pulps are moving up the value chain, replacing chemical pulps in many applications.

## 2 Refiner Mechanical Pulp (RMP)

### 2.1 Description

In this type of mechanical pulping, chips are fed into a refiner which consists of two disc plates facing one another with bars on each plate. The discs rotate relative to one another, and the consequent bar crossings create the mechanical action of refining. The chips are fed into the “eye” of the refiner, and pass radially outward through the gap between the plates, as shown in Fig 13. A refiner is shown in cross-section in Fig 14.

During passage through a refiner, the chips are comminuted into small chunks, then to individual fibres. The fibres are then further developed by removal of outer parts of the cell wall and by flexibilization. Studies have shown that most of the wood comminution takes place early in the refiner, near the breaker bar section. The resulting fibres and fibre bundles then drape over bars as shown in Fig 15. Bar crossings further break them down and develop the individual fibres.

To accomplish these tasks, the bar pattern on refiner plates differ in the radial direction. For example, there is a coarse breaker bar section in the inner radius where most of the comminution takes place. This is followed by an intermediate and fine bar section patterns. Here most of the fibre development takes place.

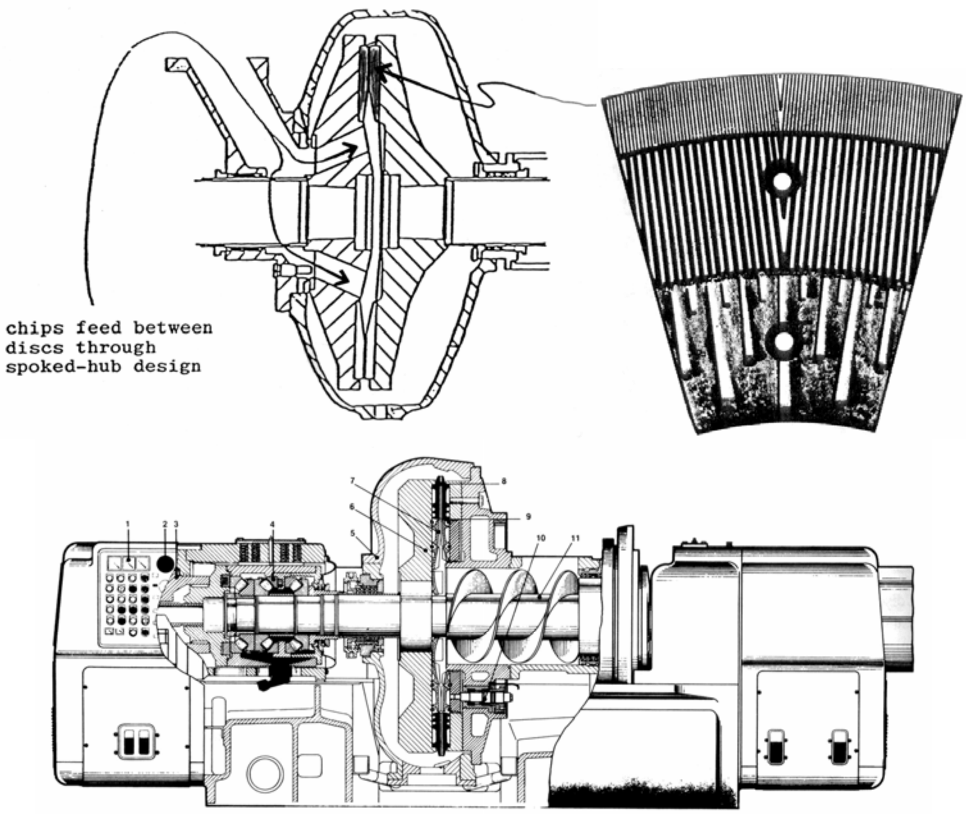

Figure: Refiner cross section, typical refiner plate and entire refiner.

During a bar crossing, fibres are “held” on the bar edge by reaction forces from the applied compression imposed by the opposing moving bar. In contrast, in stone groundwood, the fibres are held in place by the wood matrix as forces are applied. This differing “holding mechanism” may well account for the major differences between SGW and RMP pulps. The shorter fibres in SGW may result from the unyielding restraint of the wood matrix when force is applied. The RMP has more “give”. Thus, fibres may be released from the bar edge instead of being ruptured.

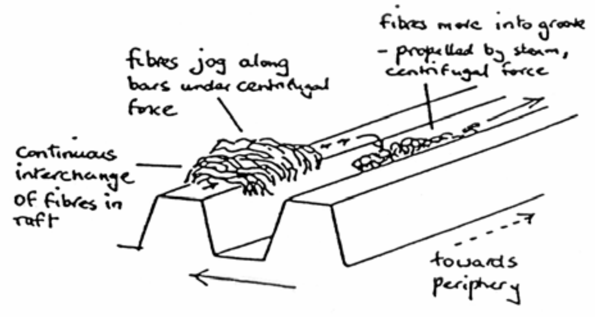

Through repeated impacts of the crossing bars the wall of the fibres starts to breakdown. The outer part of the wall becomes fibrillated as layers of microfibrils are peeled away, significantly increasing the surface area of the fibres. The inner wall becomes delaminated which increases the conformability of the fibres. The increased area and conformability increases the bond area and strength when forming paper, making a much stronger, higher tensile strength paper.

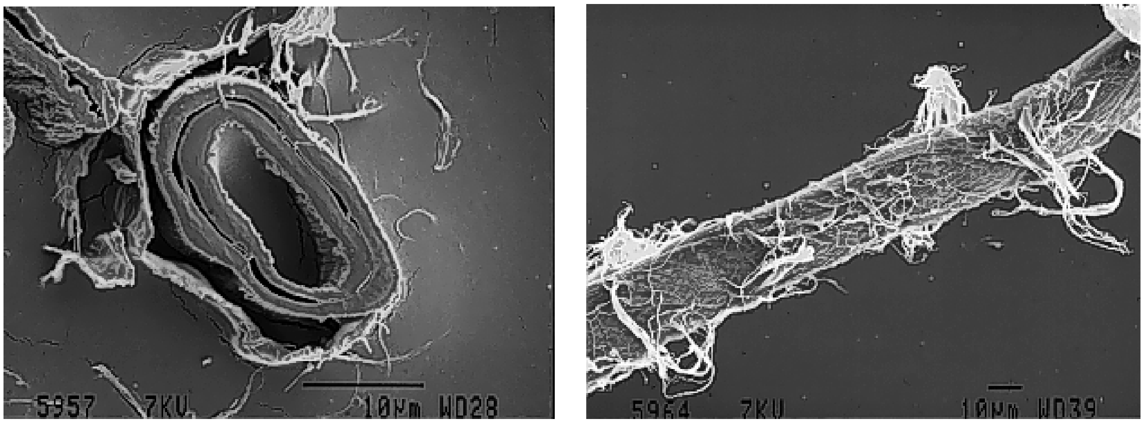

Figure: Internal and external delaminations

A large amount of energy is expended in refining (see later). This generates a very large amount of steam, requiring that dilution water be continually added to maintain the desired consistency, which in the case of refiner pulps is about 30%. The steam generation reaches a maximum at some radial point, as shown in Fig 16. The steam may flow radially inward and outward from this point. If the inward steam flow is too great, chips may not be able to enter the refiner due to “blow back”. This represents a constraint on refiner operation.

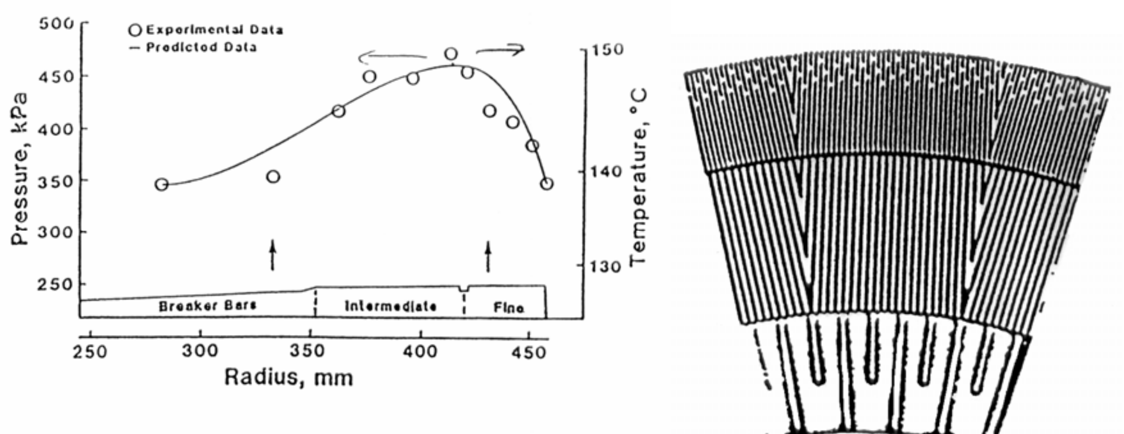

Generation of Steam in Refiner

Figure 16

## 2.2 Types of Refiners

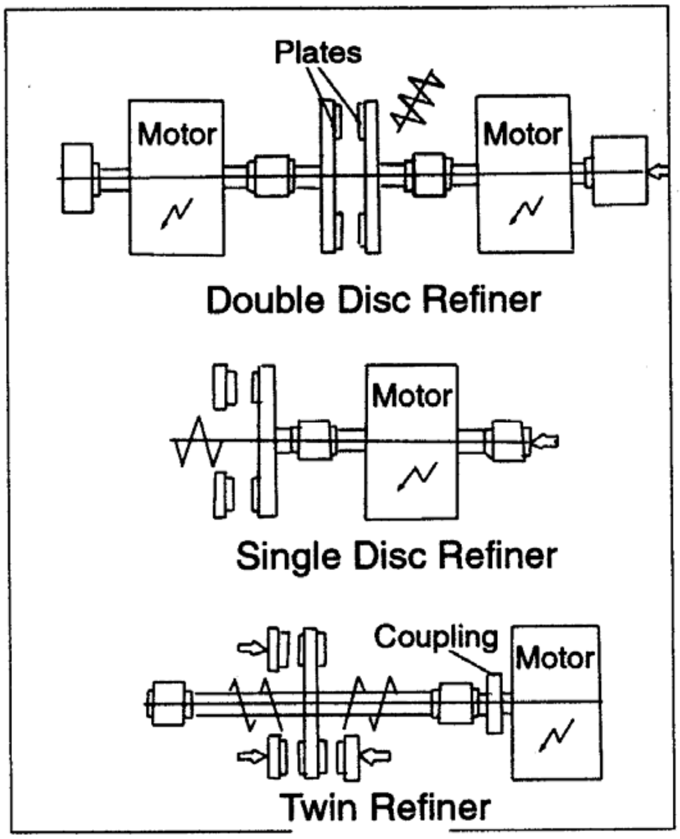

There are essentially three types of refiners used to make mechanical pulps:

1. Single disc: One of the first, still used in new installations. Lowest capital cost has smaller capacities than others.
2. Double disc: High intensity refining, less energy to obtain he same freeness. However there is a cost… pulp is more like SGW than refiner pulp.
3. Twin disc: More like a large single disc. Low intensities possible because of large refining surface. Some operational problems like feeding both sides equally.

## 2.3 Principles

Mechanical pulping is accomplished by the imposition of cyclic forces on wood. The process is complex and is still under study. Given this incomplete knowledge, it is only possible to characterize the process by some basic quantitative parameters.

### *Specific Energy*

The first and most important quantitative parameter to characterize refining action is “specific energy”, the net energy expended per unit mass in producing the pulp. This parameter is widely used and is very useful. The specific energies for various types of mechanical pulp fall in the range 5-7 GJ/tonne. It is calculated by dividing the power input, $P$, by the fibre mass throughput, $F$, i.e.,

$$E = \frac{P}{F}$$

P is the power that gets applied to the pulp and is typically given as the total power, $P_t$, minus the no load power, $P_0$, which is the power to run the refiner with the plates back completely off.  The no load power is suppose to represent the power that goes into mechanical losses.

$$P = P_t - P_0$$

### *Intensity of Refining - Miles and May theory*

Since the process is one of cyclic application of forces, the energy may be divided into a “number” and “intensity” of loading cycles, with intensity being the energy imparted during each cycle. These have only recently been successfully quantified. A key factor in doing so has been the characterization is the residence time of pulp in the refiner. At 30% consistency, pulp is a discontinuous, heterogeneous, three-phase system of fibres, water, air, and steam. Thus, the residence time must be derived from a force balance on pulp taking into account centrifugal forces, frictional drag forces, and aerodynamic drag forces from the steam flow which may flow radially inward or outward. This force balance and the derivation of refining intensity for mechanical pulp refiners is shown in Fig below.

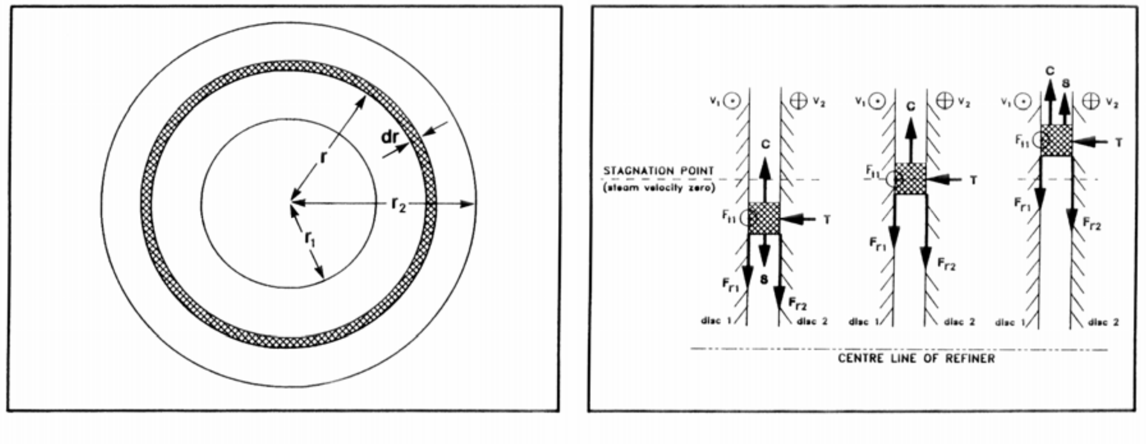

Figure: Schematic of pulp flow in refiner

Consider an element of pulp, dM, at radius, r, and conduct a simple force balance:

$$F = C - F_{r1} - F_{r2} + bS$$

Here, C is the centrifugal force, F are friction forces between the pulp and discs and S is the steam drag. The value b is +1 if the steam is flowing forward out of the refiner or is -1 if the steam is flowing backward. S=0 at the stagnation point.

Centrifugal forces:

$$C = dM\left(\omega^2 r\right)$$

Friction forces:

$$F_{r1} + F_{r2} = \left(\mu_{r1} + \mu_{r2}\right) T(r)$$

Where:

T(r) is the total normal thrust on the pulp in the annulus.

$m_{r1}$, $\mu_{r2}$ Radial coefficients of friction between the pulp and discs, respectively.

If we assume that the radial components of friction are the same, μ, and we know the pressure in the annulus, $P_m$, then

$$F_r = 4\pi\mu r P_m dr$$

Steam Drag:

$$S = \frac{1}{2}\rho U^2(r) C_f A_p(r) dM(r)$$

Where:

$C_f$ is drag coefficient
$U$ is the velocity of steam
$A_p$ Aerodynamic specific surface of the pulp

This results in the following differential equation for the velocity of the pulp through the refiner,

$$dM(r)\frac{dv}{dt} = dM(r) r\omega^2 - 4\pi\mu_r r P_m(r) dr + \frac{b}{2}\rho U^2(r) C_f A_p(r) dM(r)$$

We then relate the wet mass, M(r ) to the oven dry weight and the consistency, as

$$\dot{M} = \frac{\dot{m}}{c(r)}$$

Then by mulitiplying by dt and dividing by dr we get:

$$\frac{dv}{dr} = \frac{r\omega^2}{v} - \frac{4\pi\mu_r r P_m(r)c(r)}{\dot{m}} + \frac{b}{2}\rho U^2(r)C_f A_p(r)\frac{c(r)}{v}$$

If we assume that the power dissipated per unit are is constant then the power dissipated in the annullus is

$$P = \frac{\dot{m}EdA}{\pi\left(r_2^2 - r_1^2\right)}$$

Where,

- E is the total specific energy applied to the refiner,
- r1 and r2 are the inner and outer radii of the refining zone
- dA is the area of the annulus.

Power is assumed to be dissipated through the tangential friction force. Then,

$$P_f(r) = hF_{t1}\omega r$$

$$P_f(r) = h\mu_{t1}P_m(r)\omega r$$

Where h = 1 for single disc refiner and 2 for double disc refiners. $m_{t1}$ is the friction in the tangential direction.

And if we can assume that power dissipated in feeding the pulp in the radial direction is small then Pf(r ) = P(r ).

$$P_m(r) = \frac{\dot{m}E}{\pi\left(r_2^2 - r_1^2\right)\mu_{t1}h\omega r}$$

Still need the consistency in the refiner. We know it varies through the refiner because we care continuously generating steam. We can approximate it as:

$$C(r) = \frac{c_i L\left(r_2^2 - r_1^2\right)}{L\left(r_2^2 - r_1^2\right) - c_i L\left(r^2 - r_1^2\right)}$$

Assuming that the latent heat, L, does not change with steam pressure.
$c_i$ is the initial consistency entering the refiner.

Now we can get the residence time in the refiner by integratng the velocity.

$$\tau = \int_{r_1}^{r_2} \frac{dr}{v}$$

This can be done numerically.

The average number of impacts can be calculated as

$$\bar{n} = \bar{N}h\omega\frac{(r_2 + r_1)}{2}\tau$$

Where $\bar{N}$ is the average number of bars per unit length on the refiner plate.

The average specific energy per impact (intensity) is: ]

$$e = \frac{E}{\tau}$$

Note:

$$\frac{\mu_r}{\mu_t} \approx \frac{0.25}{0.75} = 0.33$$

***Simplified Equations for Residence time***

There is also a ‘simplified pulp flow equation’ to predict residence time.

$$\frac{dv}{dr} = \frac{r\omega^2}{v} - \frac{4\pi\mu_r rP_m(r)c(r)}{\dot{m}} \pm \frac{1}{2}\rho U^2(r)C_f A_p(r)\frac{c(r)}{v}$$

The drag and rush can be assumed to approximately balance out and thus cancel.

Further, we can assume that dv / dr is small (=0) with respect to the other remaining terms in the above equation, i.e., the centrifugal and friction terms balance.

Then, the simplified relation for residence time is given by:

$$\tau = \frac{\mu_r}{\mu_t}\frac{aEc_iL}{\omega^3\left[L\left(r_2^2 - r_1^2\right) + c_iEr_1^2\right]}\left[\ln\left(\frac{r_2}{r_1}\right) - \frac{1}{2}\ln\left(\frac{L - c_iE}{L}\right)\right]$$

And the number of impacts:

$$n = Nh\omega\frac{\left(r_1 + r_2\right)}{2}\tau$$

where $\omega$ is the rotational speed (rad/s), $c_i$ is the inlet consistency, $L$ is the latent heat of steam, $E$ is the specific energy, $r_1$ is the inner radius of the refining zone, $r_2$ is the outer radius, and $N$ is the bar density.
Use the following additional data for your calculations:

$\mu_r/\mu_t$ = 0.33
$L$ = 2200 kJ/kg
$a$ = 2 (single-disc refiner)
*h = 1 (single disc refiner)*
*h = 2 (double-disc refiner)*
*a = 2 (single disc refiner)*
$a$ = 4 (double-disc refiner)